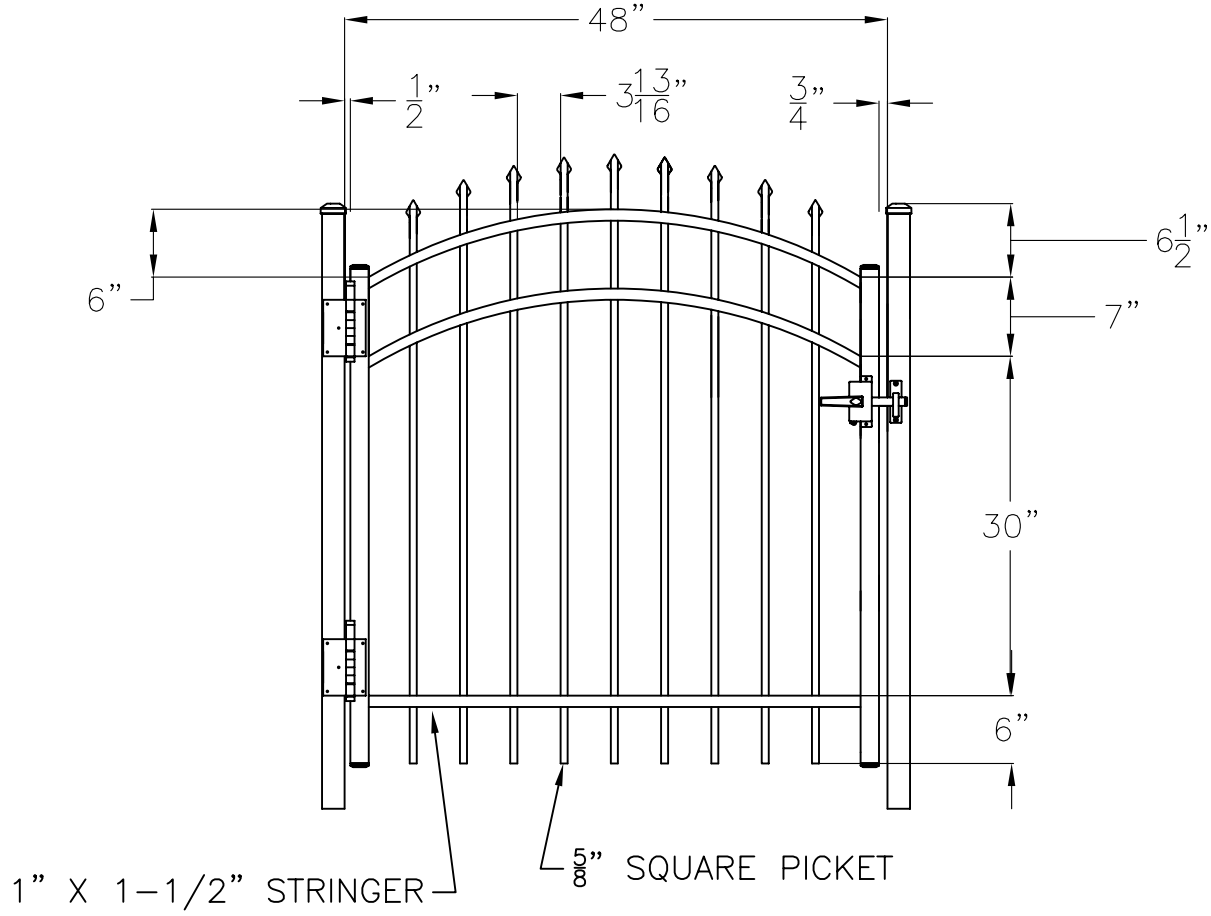

Jerith® Manufacturing Co., Inc.
Philadelphia, PA 19154
(800)344–2242

Drawing
RESIDENTIAL ACCENT GATE
STYLE #101
48” HIGH X 48” WIDE

Date September 2004

Drawing No.
RS48U10148

Copyright 2004
This drawing
may not be altered
without permission of
Jerith Manufacturing Co., Inc.